MERCRUISER (5.7L EFI (GEN+) REPOWER PLUS GM 350 V-8)
Serial Nbr Range: ALL ()

WIRING HARNESS (EFI)

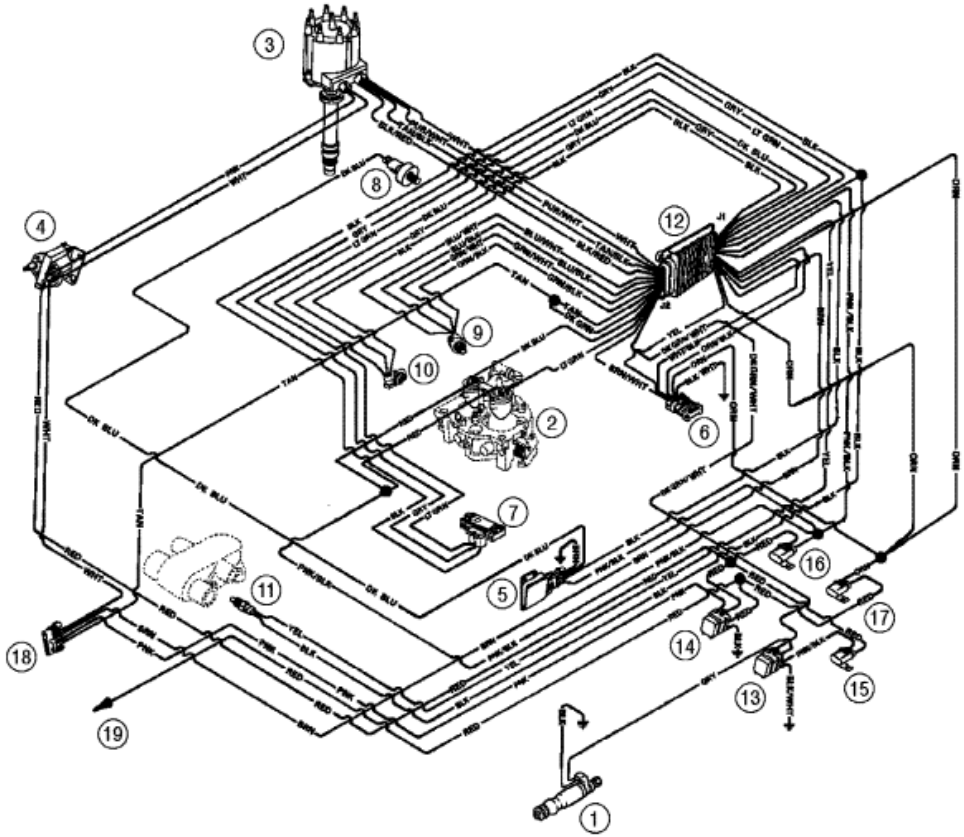

Parts List

Ref	Class	Part	Description	Qty	Comment	Footnote
-	84	807699A 2	WIRING HARNESS-ENGINE	1		